1

3

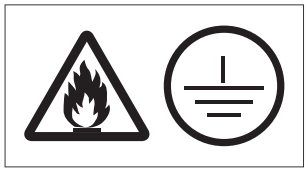

2

4

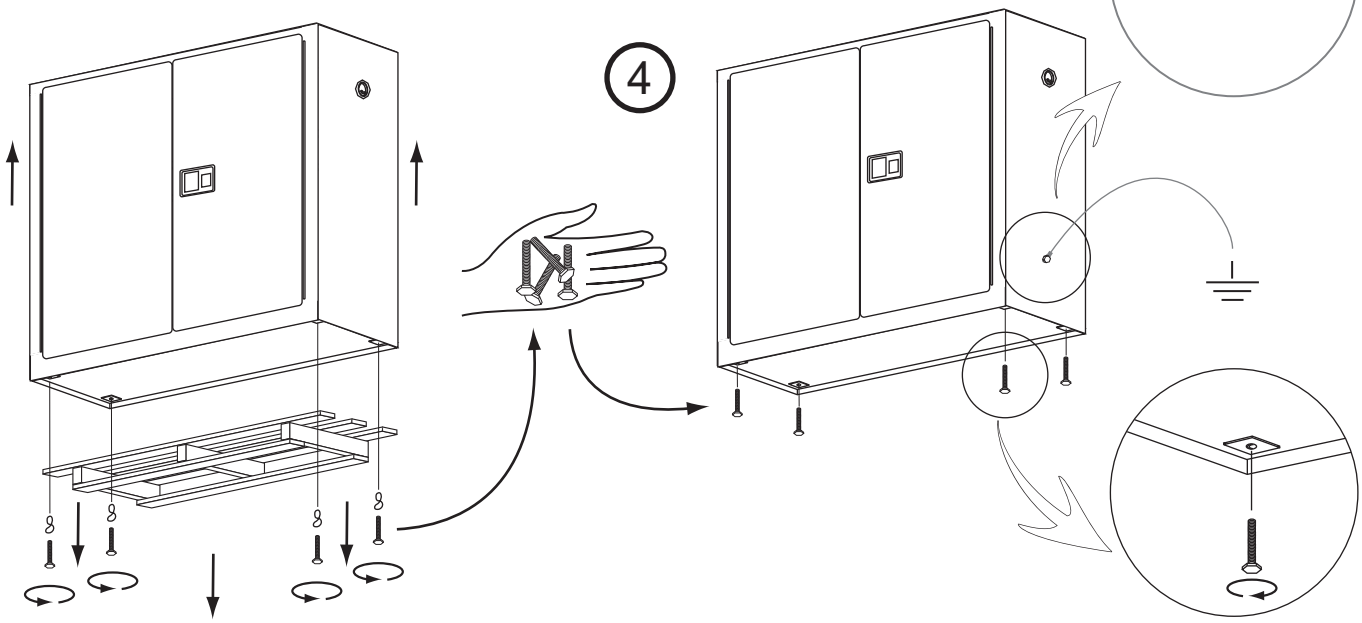

5

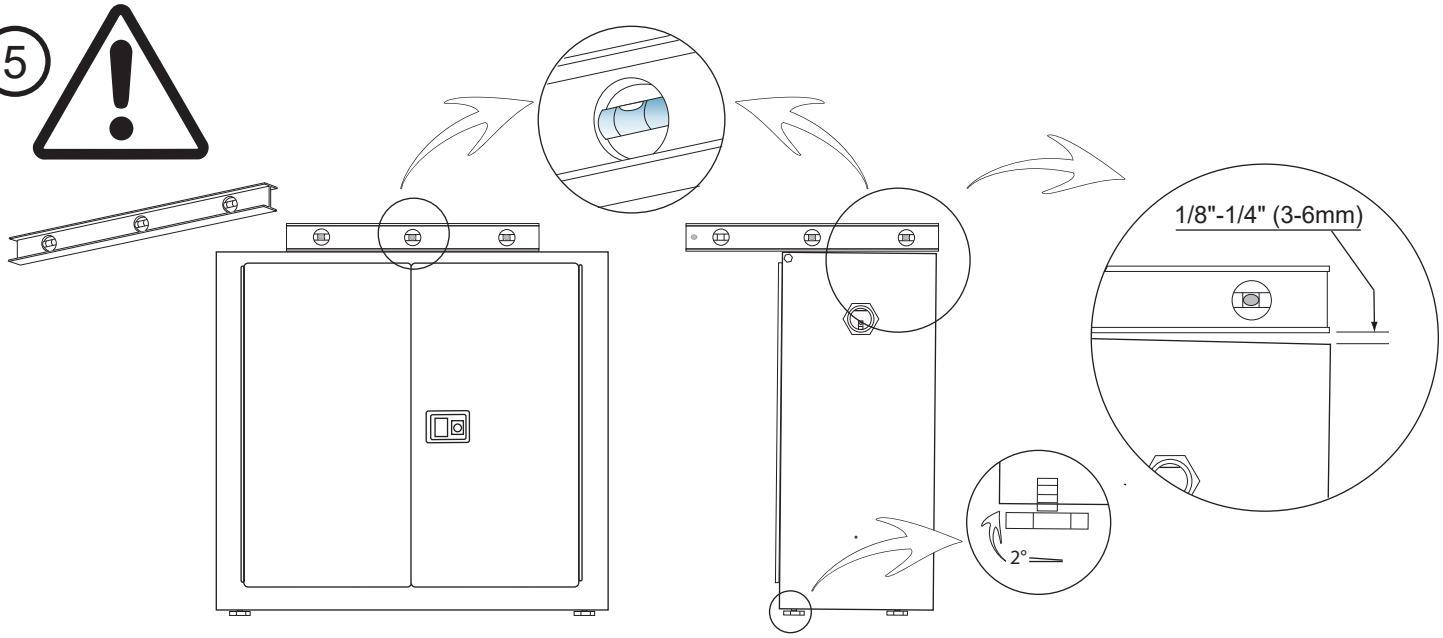

6

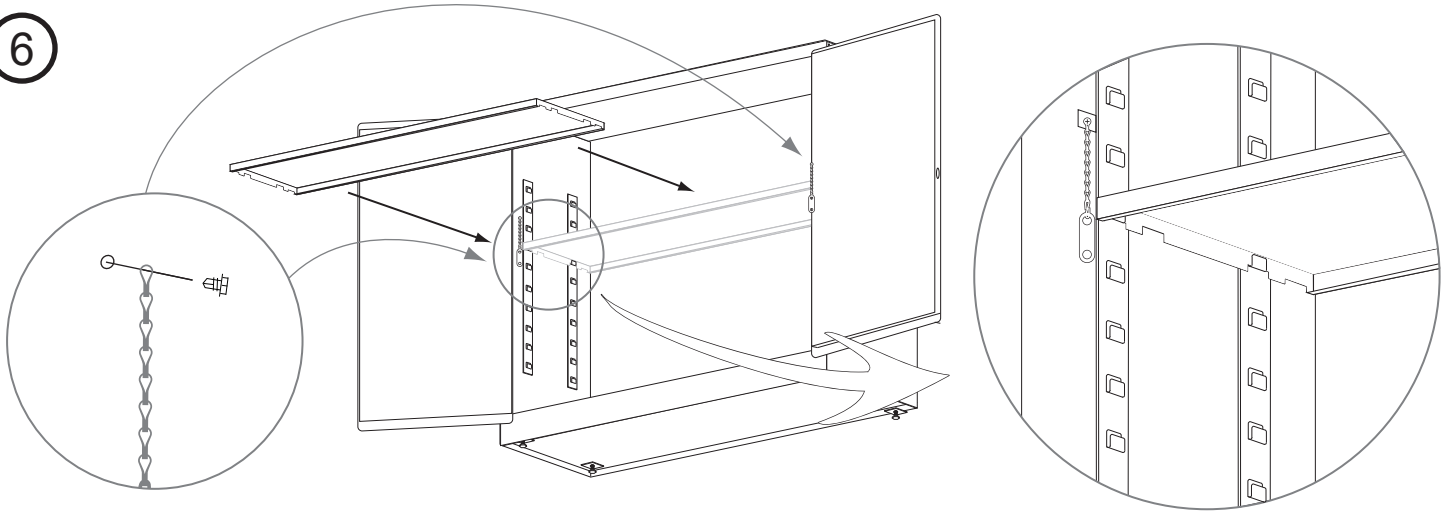

7

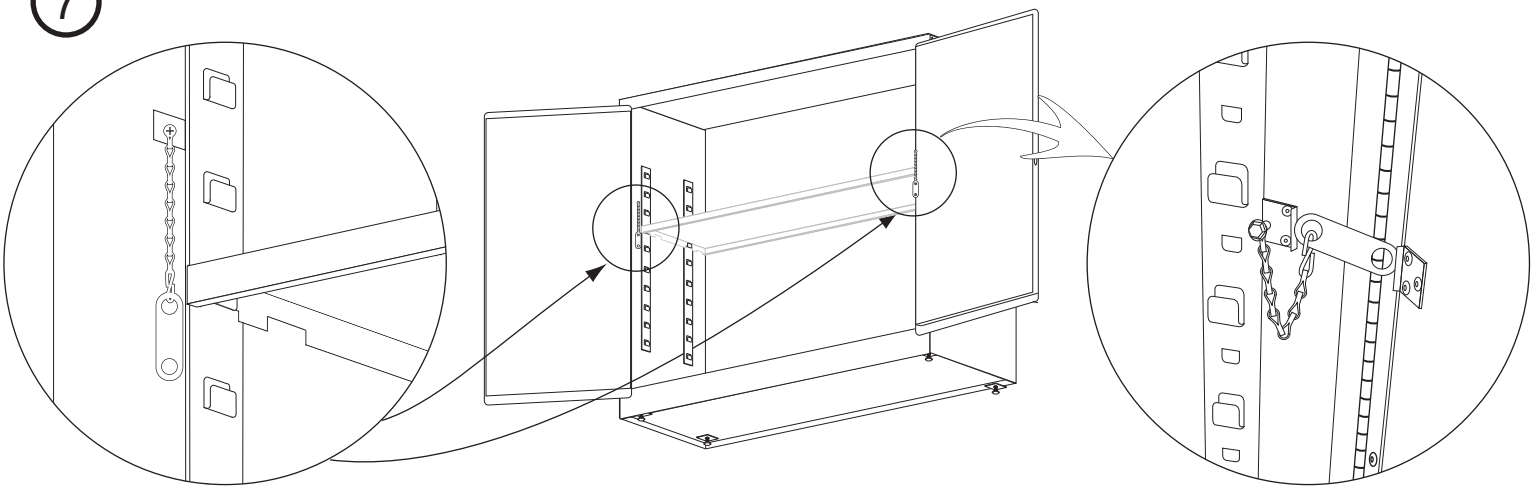

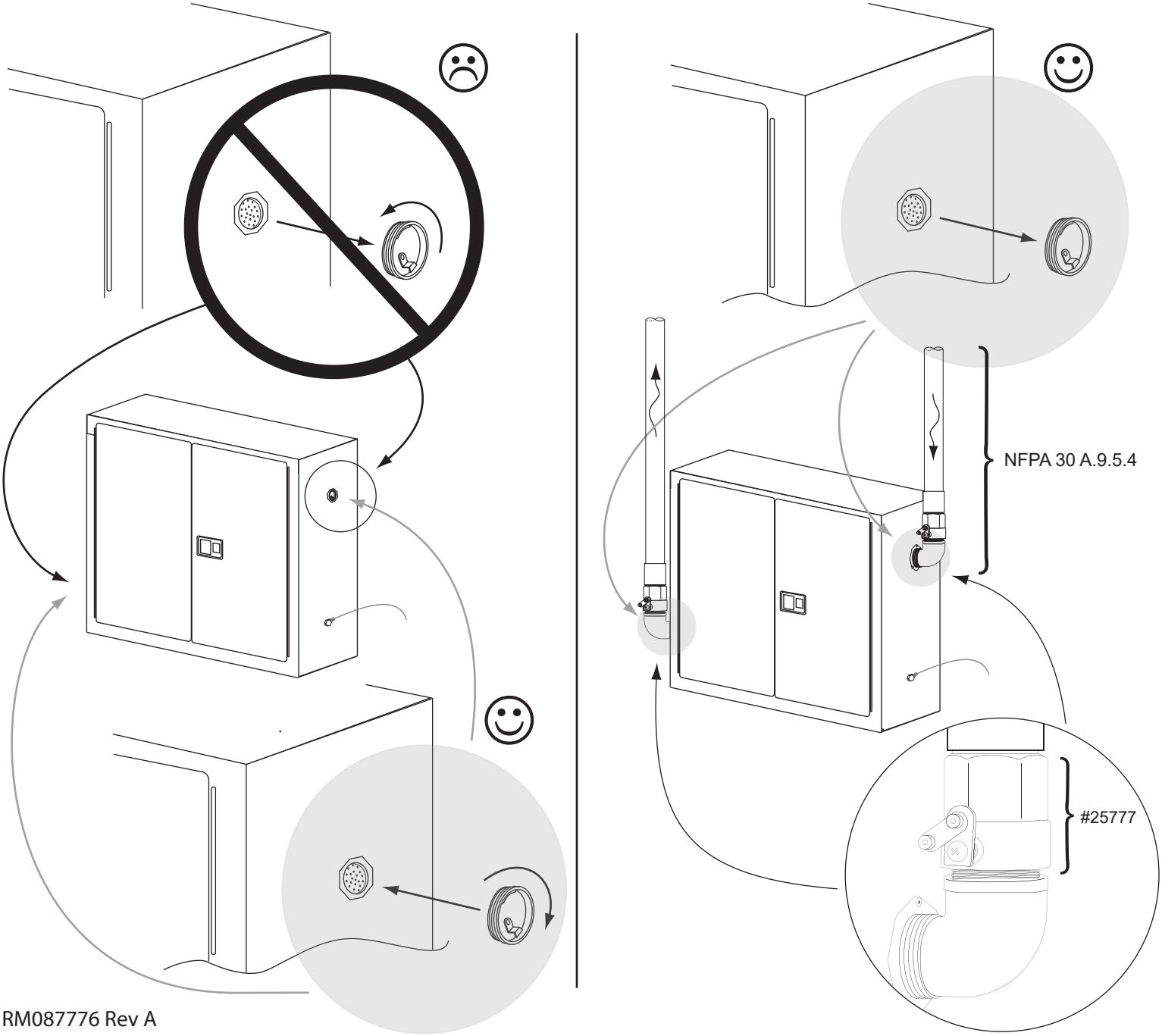

RM087776 Rev A